ÖZGENÇ MAKİNA

OMRM 127

3 Spindle Copy Router for Aluminium Profiles

Designed to perform quickly and precisely lock's holes on aluminium profile, without releasing the workpiece.

-Copy router with 1 vertical and 2 horizontal copying heads

-Designed to perform quickly and precisely lock's holes on 3 sides of the aluminium profile without releasing the workpiece

-Automatic blocking of milling depth on every position by means of pair of pneumatic horizontal and vertical clamps

-Horizontal and vertical pneumatic tracers with 3 diameters - 4, 6, 8 mm

-Horizontal & vertical templates with standard figures

-Smooth movement, high precision and great sensivity provided with recirculating ball bearings, shock absorbers and ergonomic handle's design

-1,5 mt. roller conveyors positioned at the right (with ruler) and left sides, provide support to profiles of considerable length.

-Spray cooling system

Technicial Specifications

-Power Supply : 220 V, 1 ph, 50-60 Hz

-Total Electricity Values : 2,5 Kw, 10A

-Motor KW : 0,75 Kw*3

-Air Consumption : 9 lt/min

-Air pressure : 6-8 Bar

-Machine Height : 1540 mm

-Machine Length : 1080 mm

-Machine Width : 720 mm

-Machine Weight : 110 Kg

-Maximum Machinable Profile Height : 110 mm

-Minimum Machinable Profile Height : 40 mm
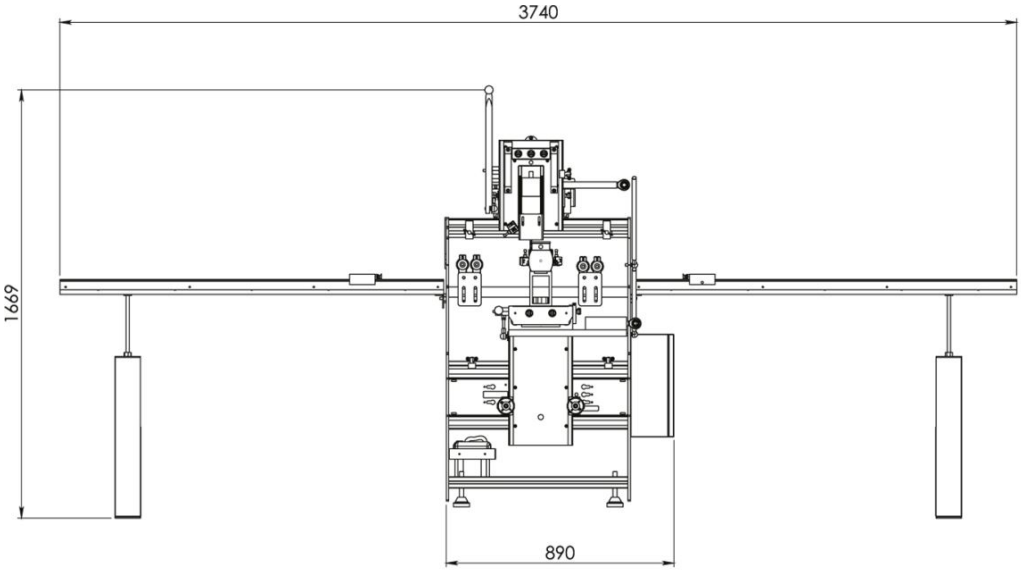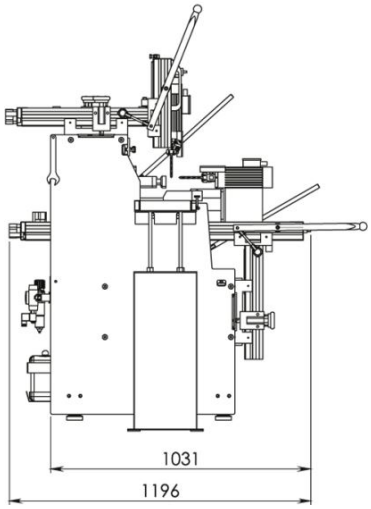
-Maximum Machinable Profile Width : 150 mm